Redmond Gary RG Australia Pty.Ltd.
ACN 070 053 584 ABN 39 070 053 584

23-25 Production Ave
Ernest, Queensland, 4214.
Australia

Phone 07 55949844
Fax 07 55949079
Email sales@rg.com.au

UNEXPECTED MOTION CONTROL

We have now received the product information Bulletin and procedure for replacement of solenoids for Redmond Gary Australia EWPs. The information in this bulletin pertains to EWPs starting from Serial No. 1199 up until Serial No. 1393. Danfoss will replace the solenoids which are equipped with LVDT feedback. The other solenoids are not affected because they do not have an LVDT feedback included in the solenoid. This means the following solenoids must be replaced:

- Turret rotation
- Boom luff
- Boom extension
- Fly boom luff

As part of the Danfoss recall on these products, they will supply replacement solenoids on exchange basis and they will pay a maximum of $120.00 including GST as labour charge for exchanging the solenoids. Detailed instructions from Danfoss on how to install new solenoids is attached.

Solenoids can be replaced by your own workshop during regular servicing or alternatively, EWPs can be returned to Redmond Gary Australia where solenoids will be replaced at no cost. If you would like us to perform this work on your site, then you would be responsible for travelling expenses for our technicians.

Because this solenoid problem includes worldwide recall, the availability of the solenoids is limited and replacement solenoids will be made available over a period of time between now and the end of February. Some of you have had solenoids replaced on your machines. These replacement solenoids will also need to be replaced. The expected life of solenoids is approx. 12-18 months before problems will become evident. Taking this into account, priority for solenoid replacement should be given to machines that have not had solenoids replaced previously.

Please liaise with Darren Hoare who will coordinate the replacement solenoid program for all EWPs.

If you intend to have your workshops replace the solenoids, you will need to record the Serial Number of the EWP when replacing the solenoids.

All replacement solenoids will be covered by 12-Month warranty from Sauer-Danfoss Daikin

Andrew Danks
Managing Director
3 November, 2008

INSTRUCTIONS

Proportional Valve PVG 32

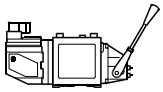

157-262.11

157R9937

Identifikation, Identification
Standardmontage : PVP til venstre for PVM
Standard installation : PVP to the left of PVM
Normale Montage : PVP links von PVM
Montage standard : PVP à gauche de PVM

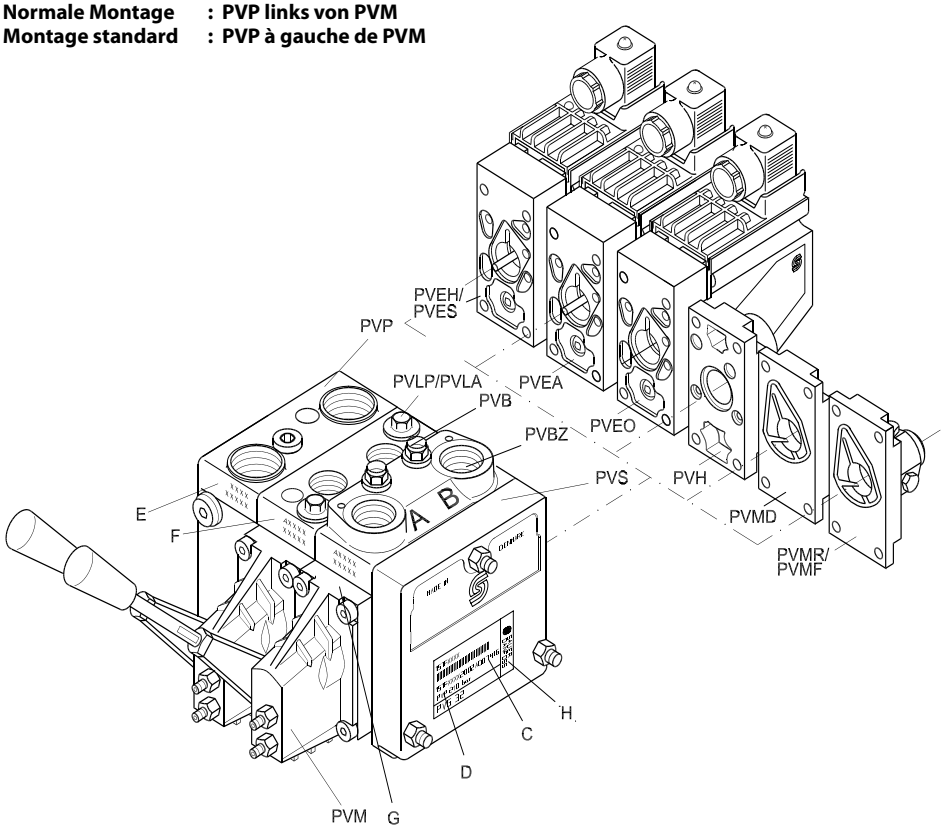

C: PVG-nummer, uge og år for montage og serienummer
D: PVP-trykindstilling
E: PVP-nummer, uge og år for fremstilling og serienummer
F: PVB - A-port, nummer, uge og år for fremstilling og serienummer
G: PVM, uge og år for fremstilling

C: PVG-number, week and year of installation and series number
D: PVP - pressure setting
E: PVP-number, week and year of manufacturing and series number
F: PVB - A-port, number, week and year of manufacturing and series number
G: PVM, week and year for manufacturing

C: PVG-Nummer, Woche und Jahr der Montage und Seriennummer
D: PVP - Druckeinstellung
E: PVP-Nummer, Woche und Jahr der Herstellung und Seriennummer
F: PVB - A-Anschluß, Nummer, Woche und Jahr der Herstellung und Seriennummer
G: PVM, Woche und Jahr der Herstellung

C: PVG-numéro, semaine et année de montage et numéro sériel
D: PVP - réglage de pression
E: PVP-numéro, semaine et année de fabrication et numéro sériel
F: PVB - orifice-A, numéro, semaine et année de fabrication et numéro sériel
G: Semaine et année de fabrication

Montering og orientering af stik
Installation and plug orientation
Montage und Ausrichtung des Steckers
Montage et orientation de la prise

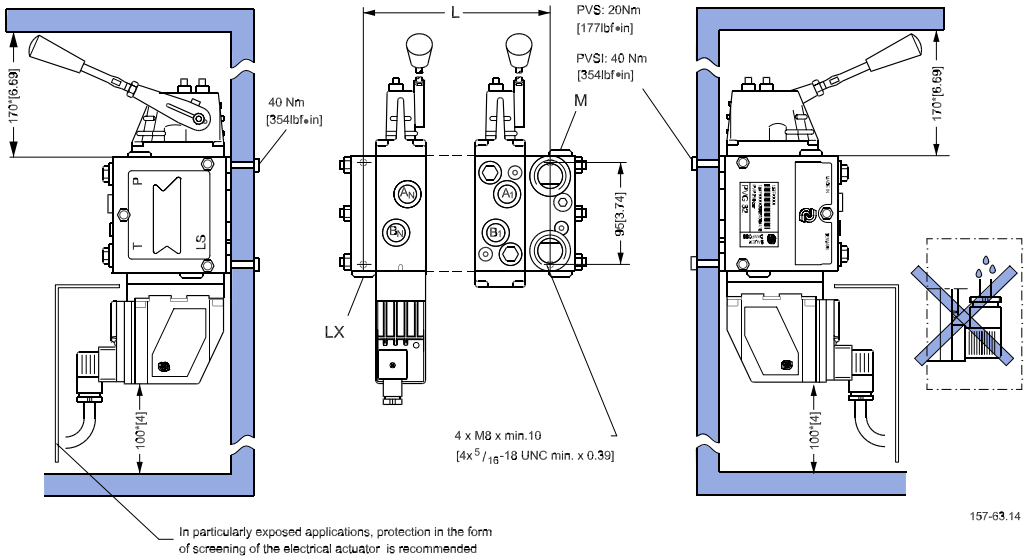

157-63.14

PVB	1	2	3	4	5	6	7	8	9	10
L_{mm}	82	130	178	226	274	322	370	418	466	514
L_{in}	3.23	5.12	7.01	8.90	10.79	12.68	14.57	16.46	18.35	20.24

* Plads til demontage
* Room for dismantling
* Platz für Demontage
* Espace pour démontage

Montage af PVE
Installation of PVE
Montage von PVE
Installation de PVE

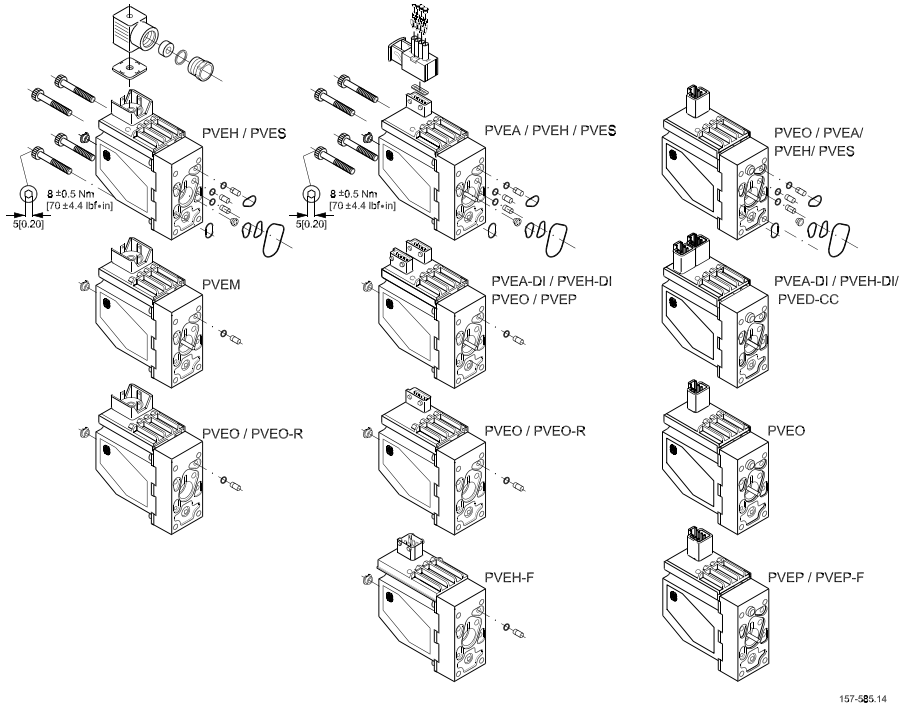

AMP versions:
Pakningen i PVE stikket samt pakningerne til de enkelte ledninger, er afgørende for at korrekt tæthed af stikket opnås.

The seal in the PVE connector and the seals for individual conductors are crucial for correctly sealing the connector.

Die Dichtung im PVE-Stecker sowie die Dichtungen für die einzelnen Drähte sind für die Dichtheit des Steckers von entscheidendem Einfluss.

Le joint de la prise PVE ainsi que les joints de chaque conducteur, jouent un rôle essentiel dans la qualité de l'étanchéité de la prise.

Udluftning
Hvis gruppen er monteret vertikalt, anbefales det at udlufte ved justerskruer (Pos.A)
Bemærk: Ved PVEA kan det, pga.dens hydrauliske opbygning, være påkrævet at foretage udluftning.

Bleeding
If the group is installed vertically, it is recommended to bleed it at the adjusting screws (Pos.A)
Note: Because of the hydraulic build-up of PVEA, it may be necessary to bleed the PVEK.

Entlüftung
Wenn die Gruppe vertikal montiert ist, empfehlen wir an den Justierschrauben zu entlüften (Pos.A)
Beachte: Wegen des hydraulischen Aufbaus von PVEA kann eine Entlüftung erforderlich sein.

Purge
Si l'ensemble est monté verticalement, il est recommandé de le purger au moyen des vis d'ajustage (Pos.A)
Nb! En raison du système hydraulique des PVEAs il peut s'avérer nécessaire de purger.

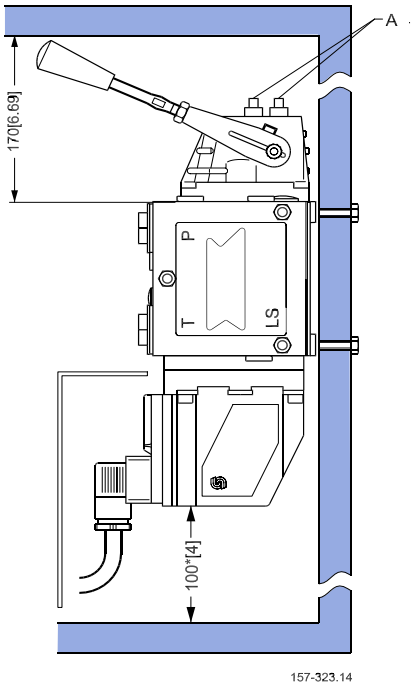

Beskyttelse
PVE-moduler med Hirschmann stik overholder tæthedsgrad IP 65 i henhold til IEC 529.
PVE-moduler med AMP stik overholder tæthedsgrad IP66 i henhold til IEC 529.
Det anbefales dog, at PVE'en på særligt udsatte steder beskyttes i form af en afskærmning eller lignende.

Protection
PVE-modules with Hirschmann connectors conform to enclosure IP 65 in IEC 529.
PVE-modules with AMP connectors conform to enclosure IP 66 in IEC 529.
However, it is recommended to additionally shield all such PVE-modules that are exposed to particularly moist conditions.

Schutzgrad
PVE-Module mit Hirschman Stecker erfüllen Schutzart IP 65 in IEC 529.
PVE-Module mit AMP Stecker erfüllen Schutzart IP 66 in IEC 529.
Wenn die PVE-Module aber besonders nassen Bedingungen ausgesetzt sind, werden weitere Schutzmaßnahmen in Form von einer Abschirmung empfohlen.

Protection
ProtectionLes modules PVE équipés de la prise Hirschmann possèdent le degré de protection IP65 conformément à la IEC 529.
Les modules PVE équipés de la prise AMP possèdent le degré de protection IP66 conformément à la IEC 529.
Dans les zones particulièrement exposées, il est cependant conseillé de protéger le PVE à l'aide d'un écran ou d'un dispositif similaire.

Product Information Bulletin

PIB-PV2008-008
Date: 21-Oct-2008

PRODUCTS AFFECTED:	SUBJECT:
PVG, EH and EHPS Valves with PVES, PVEH, PVEP, PVEM, PVEA, PVEB and PVED control modules	Control circuit monitoring
MODELS AFFECTED:	

Sauer-Danfoss has identified a product issue that affects the Series 4 PVES, PVEH, PVEP, PVEM, PVEA, PVEB and PVED electrical control modules. These devices are used on Sauer-Danfoss PVG 32, PVG100 and PVG120 proportional valve assemblies and EH and EHPS steering valve assemblies

The electrical control module contains a linear variable differential transformer (LVDT) to assist in monitoring the position of the main spool for the PVG valve assembly and providing a feedback signal to a circuit board (PCB) within the electrical control module.

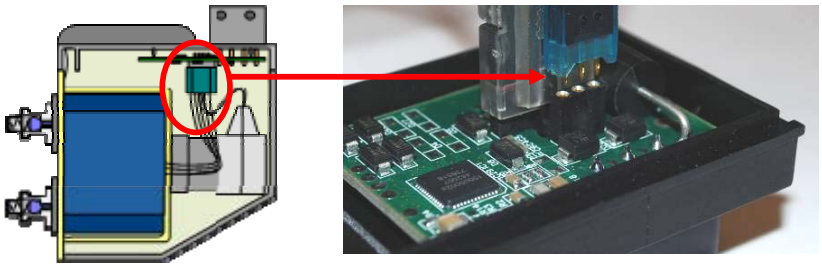

Sauer-Danfoss has identified that fretting corrosion can occur within an internal electrical connector between the LVDT and PCB on PVE Series 4 starting from introduction until 27-Apr-2008. The fretting corrosion in the internal electrical connector will not result in any general degradation of performance in most valve applications. However, the fretting corrosion condition can produce a false neutral indication, causing a non-anticipated valve response. When this failure mode occurs, on board fault monitoring may not be triggered.
In CAN bus systems (using PVED) fretting corrosion can cause an increased occurrence of error codes related to spool neutral.

The operator or vehicle control system has the ability to respond to/over-ride the function of the system by activating the primary control and/or emergency stop systems.

Based on analyses completed on returned PVEs, Sauer-Danfoss has determined that the probability of a connector failure within the control is below 0.1% of the total population. However, Sauer-Danfoss continues to monitor occurrence rates, and would emphasize the need for a comprehensive analysis on each failure reported.

Starting with production on 28-Apr-2008, material and geometry changes were made to the internal electrical connector to eliminate the potential for fretting corrosion and electrical failure.

Sauer-Danfoss believes it is important that as the machine manufacturer you are made aware of this so that consideration can be given to your machine's overall safety system and any subsequent actions you may consider appropriate. Please consult with your Sauer-Danfoss representative on any additional support you may need in relation to this issue.

Product Information Bulletin No.: PV2008-008	DISTRIBUTION
Date: 21-Oct-2008	
Author: Steen Slot	