VERTICAL MACHINING CENTER
LINEAR GUIDE WAYS A SERIES

EA-600
A-6/HPA-6
A-8/A-10
A-10L/HPA-10
A-12/A-14

Value models create profits and quality

Agma

EA-600

Vertical Machining Center

AGMA once again presents high speed linear guide ways A series Model EA-600 machining center to a foresighted customer like you with industry-leading scraping technology of hardened box way and the technological capacity of manufacturing process. EA-600 is the Highest Capability/Price Ratio Vertical Machining Center. This series of machines are based on high rigidity Meehanite cast iron (FC30) with stress relieved to ensure maximum accuracy and absolute rigidity. Adopt BT-40 Direct Driven 10,000rpm spindle as standard and Direct Driven 12,000/15,000rpm and Belt Driven 8,000/10,000rpm spindle as option. Three axes adopt high precision linear guideways and ball screws. Other optional accessories which fully comply with a variety of cutting demand are also available.

EA-600

X/Y/Z Traverse 600/410/460mm
BT-40 Arm type 24 tools ATC
BT-40 Direct Driven 10,000 rpm (standard)
BT-40 Direct Driven 12,000/15,000 rpm (option)
BT-40 Belt Driven 8,000/10,000 rpm (option)

EA-600

Highest Capability/Price Ratio

Synchronously adopt the European & Japanese design

- Wide-span rigid column
- Taiwan-made PMI extra-large 30/30/30mm precise ball-rail linear guide ways is standard and Taiwan made PMI roller- rail linear guide way and Japan made roller-rail linear guide way are option.
- Adopt high-end direct motors and high rigidity couplings in three axes.
- High quality full-length enclosed splash guard, elegant appearance, well-executed, and in good taste.

Extra-large X/Y/Z -axis motor

3.0/3.0/3.0KW (no counter balance design)

High reliable and high accuracy ballscrew design

Ø32/32/32mm high class double nut ballscrew provides strong rigidity, high torque, better accuracy, long-life, and effectively heat extension control.

Extra wide door design

The width of door reaches 730mm for conveniently loading and unloading the fixture and workpiece.

Stable air supply equipment (option)

The gas storage barrel assists to acquire steady air source to increase equipment utility rate.

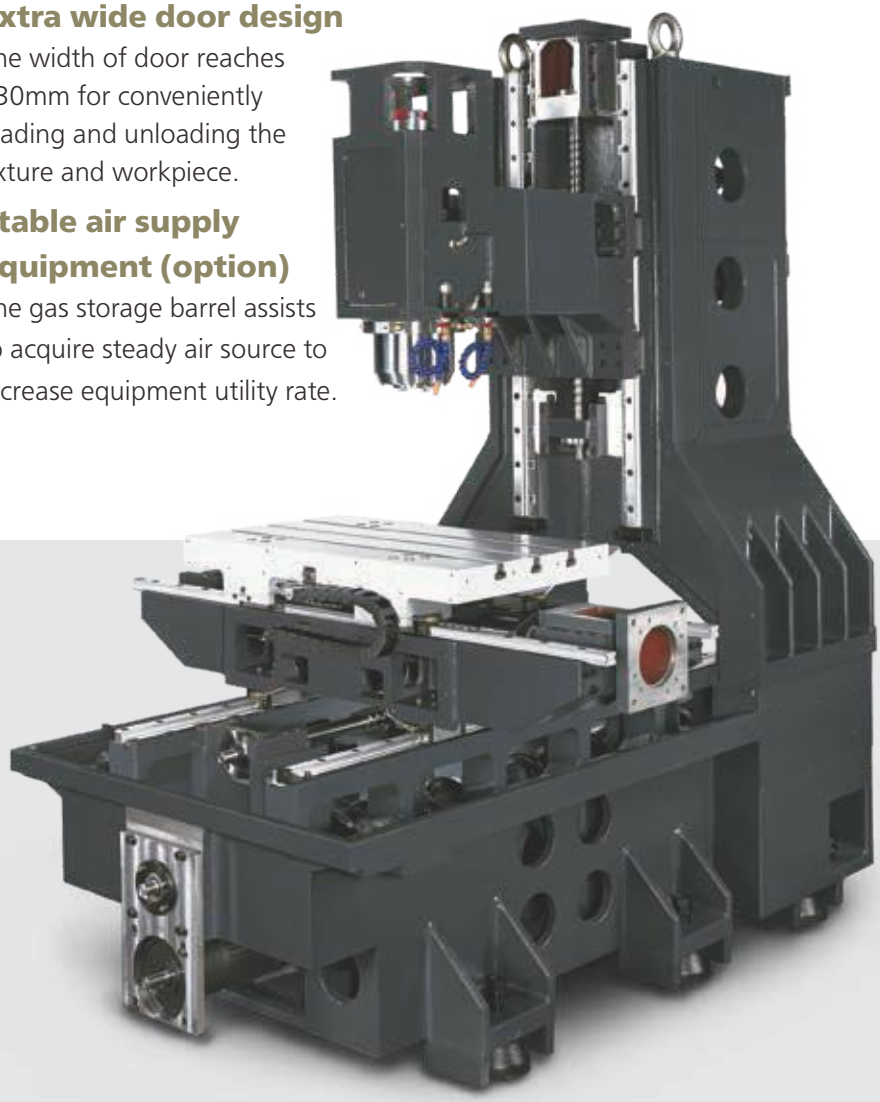

Unique Column Design

Single central screw type chip auger collocates left and right sides flush to remove the chip from front to back.

Chip Auger motor shrinks within to reduce the distance of the front sheet metal for ergonomics improvement on the ease of workpieces loading and unloading.

Single Screw Type Chip Auger on Y axis central (EA-600)

A-6

Vertical Machining Center

AGMA once again presents high speed linear guide ways A series Model A-6 machining center to a foresighted customer like you with industry-leading scraping technology of hardened box way and the technological capacity of manufacturing process. A-6 is the value model which creates profits and quality. This series of machines are based on high rigidity Meehanite cast iron (FC30) with stress relieved to ensure maximum accuracy and absolute rigidity. Adopt BT-40 Direct Driven 10,000rpm spindle as standard and Direct Driven 12,000/15,000rpm and Belt Driven 8,000/10,000rpm spindle as option. Three axes adopt high precision linear guideways and ball screws. Other optional accessories which fully comply with a variety of cutting demand are also available.

A-6

X/Y/Z Traverse 610/420/460mm
BT-40 Arm type 24 tools ATC
BT-40 Direct Driven 10,000 rpm (standard)
BT-40 Direct Driven 12,000/15,000rpm (option)
BT-40 Belt Driven 8,000/10,000rpm (option)

HPA-6 Ultra-High-Speed Vertical Machining Center

Rapidest Cutting Feed rate 30,000mm/min among Taiwan Machine

AGMA once again presents Ultra-High-Speed linear guide ways A series HPA-6 machining center to a foresighted customer like you with industry-leading scraping technology of hardened box way and the technological capacity of manufacturing process. Rapidest Cutting Feedrate 30,000mm/min among Taiwanese machines is a special feature for this model which creates high-efficient and high-stability superiority. This series of machines are based on high-rigidity Meehanite cast iron (FC30) with stress relieved to ensure maximum accuracy and absolute rigidity. Adopt BT-40 Direct Driven 15,000rpm spindle as standard, and Direct Driven 10,000/12,000rpm spindle as option. Three axes adopt high precision linear guideways and ball screws. Other optional accessories which fully comply with a variety of cutting demand are also available.

HPA-6

X/Y/Z Traverse 610/420/460mm
BT-40 Arm type 24 tools ATC
BT-40 Direct Driven 15,000 rpm (standard)
BT-40 Direct Driven 10,000/12,000rpm (option)

A-6 / HPA-6

High-Rigidity Structure Design

Synchronously adopt the European & Japanese design

- Wide-span rigid column.
- Taiwan-made PMI extra-large 35/35/35mm precise roller-rail linear guide ways is standard and Japan made roller-rail linear guide way is option (for A-6).
- Adopt Japan-made NSK extra-large 35/35/35mm precise roller-type linear guide way (for HPA-6).
- Adopt high-end direct motors and high rigidity couplings in three axes.
- High quality fully enclosed splash guard, elegant appearance, well-executed and in good taste.

Extra-large X/Y/Z axis motor

3.0/3.0KW /3.0KW (no counter balance design) for A-6.
3.0/4.0KW /4.0KW (no counter balance design) for HPA-6 .

High reliable and high accuracy ballscrew design

Ø40/40/40mm high class double nut ballscrew provides strong rigidity, high torque, better accuracy, long-life, and effectively heat extension control (for A-6)

Taiwan Made PMI Ø40/40/40mm Hollow Ballscrew with Air Cooling System for HPA-6 is standard.

Extra wide door design

The width of door reaches 850mm for conveniently loading and unloading the fixture and workpiece.

Stable air supply equipment (option)

- The gas storage barrel assists to acquire steady air source to increase equipment utility rate.

Chip Conveyor for A-6 is option, but for HPA-6 is standard.

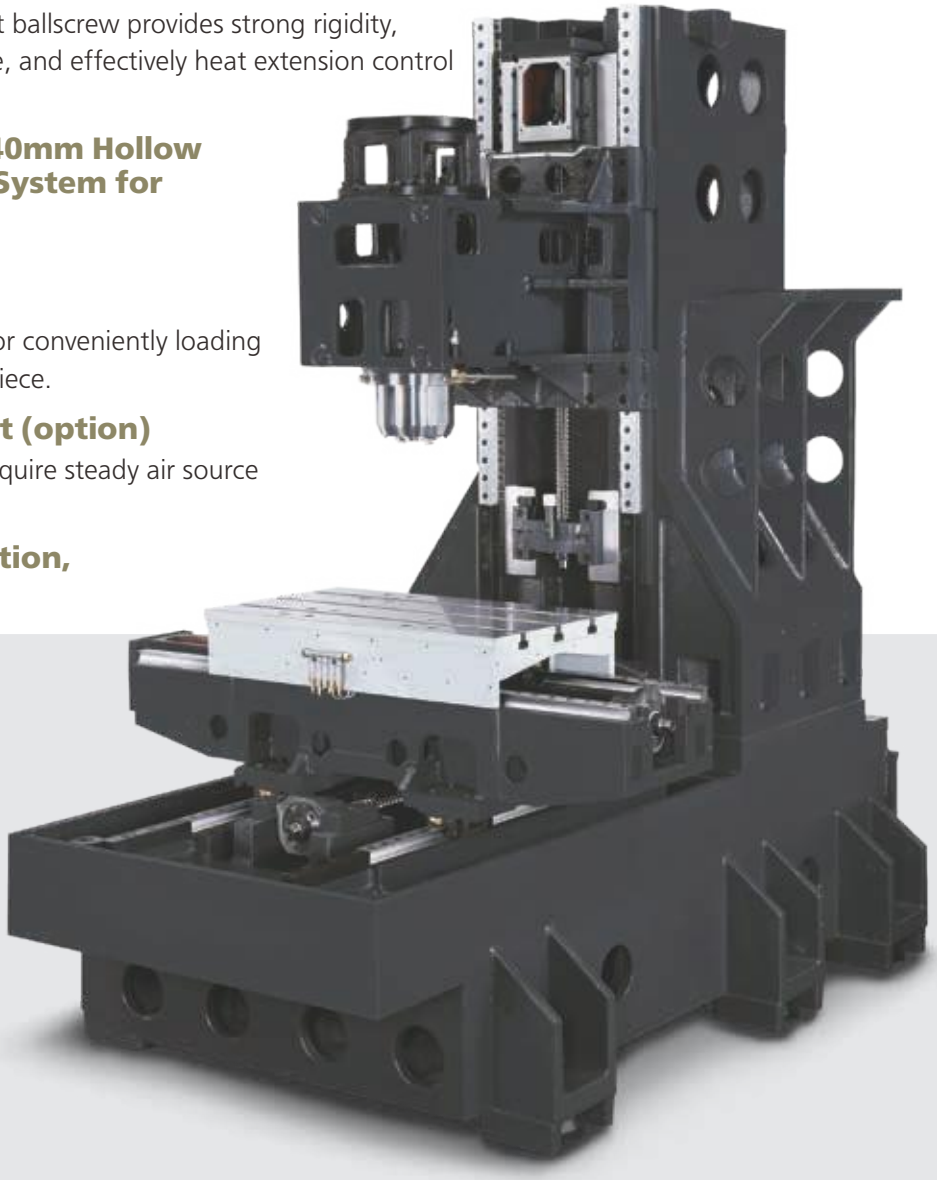

A-8

Vertical Machining Center

AGMA once again presents high speed linear guide ways A series model A-8 machining center to a foresighted customer like you with industry-leading scraping technology of hardened box way and the technological capacity of manufacturing process. A-8 is the value model which creates profits and quality. This series of machines are based on highrigidity Meehanite cast iron (FC30) with stress relieved to ensure maximum accuracy and absolute rigidity. Adopt BT-40 Direct Driven 10,000rpm spindle as standard and Direct Driven 12,000/15,000rpm and Belt Driven 8,000/10,000rpm spindle as option. Three axes adopt high precision linear guideways and ball screws. Other optional accessories which fully comply with a variety of cutting demand are also available.

A-8

X/Y/Z Traverse 800/510/510mm
BT-40 Arm type 24 tools ATC
BT-40 Direct Driven 10,000 rpm (standard)
BT-40 Direct Driven 12,000/15,000rpm (option)
BT-40 Belt Driven 8,000/10,000rpm (option)

A-10

Vertical Machining Center

AGMA once again presents high speed linear guide ways A series model A-10 machining center to a foresighted customer like you with industry-leading scraping technology of hardened box way and the technological capacity of manufacturing process. A-10 is the value model which creates profits and quality. This series of machines are based on high-rigidity Meehanite cast iron (FC30) with stress relieved to ensure maximum accuracy and absolute rigidity. Adopt BT-40 Direct Driven 10,000rpm spindle as standard and Direct Driven 12,000/15,000rpm and Belt Driven 8,000/10,000rpm spindle as option. Three axes adopt high precision linear guideways and ball screws. Other optional accessories which fully comply with a variety of cutting demand are also available.

A-10

X/Y/Z Traverse 1,020/560/510mm
BT-40 Arm type 24 tools ATC
BT-40 Direct Driven 10,000 rpm (standard)
BT-40 Direct Driven 12,000/15,000rpm (option)
BT-40 Belt Driven 8,000/10,000rpm (option)

A-10L

Vertical Machining Center

AGMA once again presents high speed linear guide ways A series A-10L machining center to a foresighted customer like you with industry-leading scraping technology of hardened box way and the technological capacity of manufacturing process. A-10L is a Performance and Speed beyond Expectation, Extended Y & Z Traverse model. This series of machines are based on high-rigidity Meehanite cast iron (FC30) with stress relieved to ensure maximum accuracy and absolute rigidity. Adopt BT-40 Direct Driven 10,000rpm spindle as standard and Direct Driven 12,000/15,000rpm and Belt Driven 8,000/10,000rpm spindle as option. Three axes adopt high precision linear guideways and ball screws. Other optional accessories which fully comply with a variety of cutting demand are also available.

A-10L

X/Y/Z Traverse 1,020/600/600mm
BT-40 Arm type 24 tools ATC
BT-40 Direct Driven 10,000 rpm (standard)
BT-40 Direct Driven 12,000/15,000rpm (option)
BT-40 Belt Driven 8,000/10,000rpm (option)

HPA-10 Ultra-High-Speed Vertical Machining Center

Rapidest Cutting Feed rate 30,000mm/min among Taiwan Machine

AGMA once again presents Ultra-High-Speed linear guide ways A series HPA-10 machining center to a foresighted customer like you with industry-leading scraping technology of hardened box way and the technological capacity of manufacturing process. Rapidest Cutting Feedrate 30,000mm/min among Taiwanese machines is a special feature for this model which creates high-efficient and high-stability superiority. This series of machines are based on high-rigidity Meehanite cast iron (FC30) with stress relieved to ensure maximum accuracy and absolute rigidity. Adopt BT-40 Direct Driven15,000rpm spindle as standard, and Direct Driven 10,000/12,000rpm spindle as option. Three axes adopt high precision linear guideways and ball screws. Other optional accessories which fully comply with a variety of cutting demand are also available.

HPA-10

X/Y/Z Traverse 1,020/560/510mm
BT-40 Arm type 24 tools ATC
BT-40 Direct Driven 15,000 rpm (standard)
BT-40 Direct Driven 10,000/12,000 rpm (option)

A-8/A-10/A-10L/HPA-10

High-Rigidity Structure Design

Synchronously adopt the European & Japanese design

- Wide-span rigid column
- Adopt Taiwan-made PMI extra-large 30/45/45mm (for A-8) and 35/45/45mm (for A-10/A-10L) precise roller type linear guide way is standard and Japan made roller-rail linear guide way is option.
- Adopt Japan-made NSK extra-large 35/45/45mm precise roller type linear guide way (for HPA-10).
- X/Y/Z axis adopts high specification direct driven motor and high rigid coupling.
- High quality fully enclosed splash guard, elegant appearance, well-executed and in good taste.

Extra-large X/Y/Z axis motor

3.0/3.0KW 3.0KW (no counter balance design) for A-8
3.0/3.0KW 4.0KW (no counter balance design) for A-10/A-10L
4.0/7.0KW 7.0KW (no counter balance design) for HPA-10

High reliable and high accuracy ballscrew design

Ø40/40/40mm high class double nut ballscrew provides strong rigidity, high torque, better accuracy, long-life, and effectively heat extension control (for A-8/A-10/A-10L)

Taiwan Made PMI Ø40/40/40mm Hollow Ballscrew with Air Cooling System for HPA-10 is standard.

Extra Wide door design

The width of door reaches 1160mm for conveniently loading and unloading the fixture and workpiece.

Stable air supply equipment (option)

The gas storage barrel assists to acquire steady air source to increase equipment utility rate.

Chip Conveyor for A-8/A-10/A-10L is option, but for HPA-10 is standard.

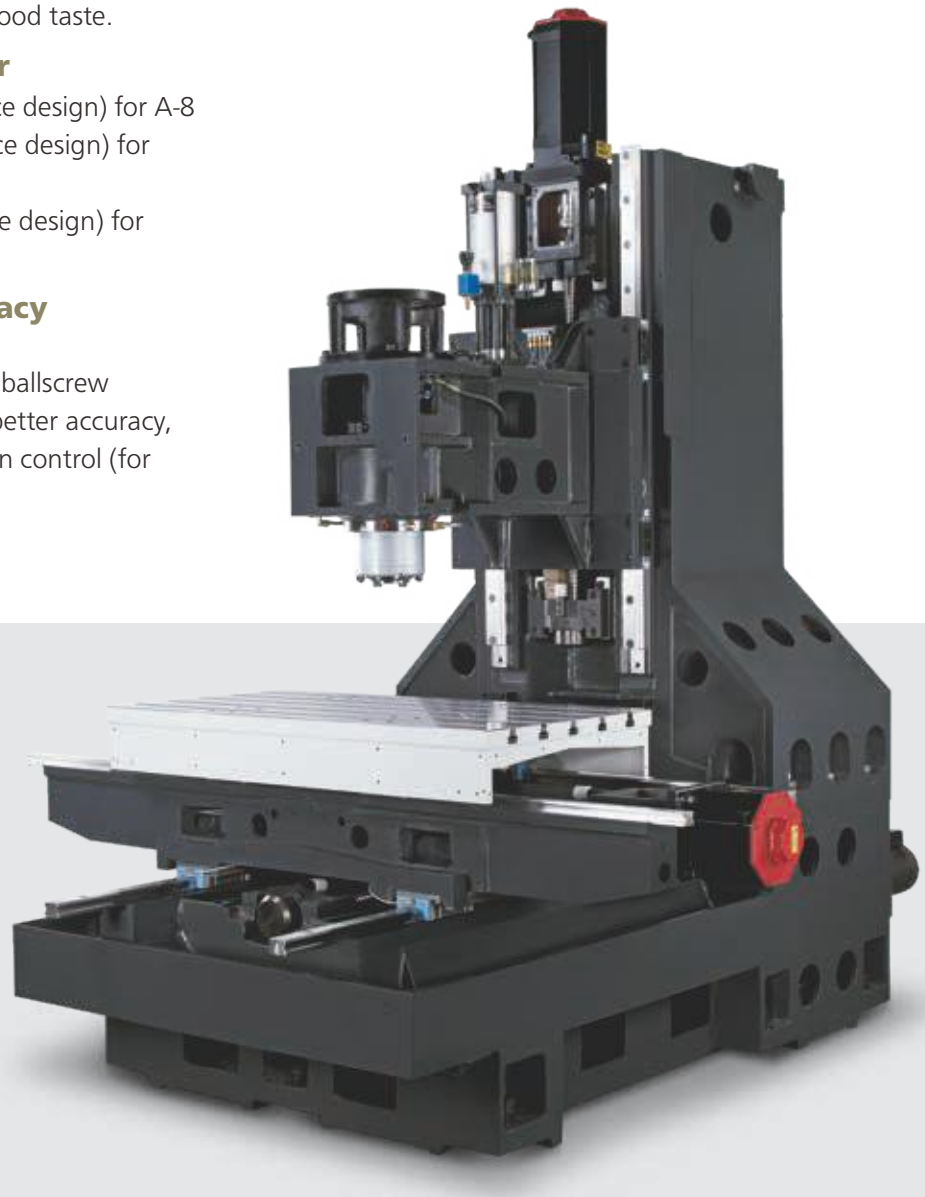

Y-Axis Screw Type Chip Augers (2 pcs) (A-8/A-10/A-10L/HPA-10)

A12 / A14

Vertical Machining Center

The overall design of A12/A14 linear guide way A series is to achieve the best balance of structure rigidity, machining speed, and output efficiency for various industries, such as automobile and aerospace etc. Adopt BT-40 Belt Driven 8,000rpm spindle as standard, and BT-40 Belt Driven 10,000rpm and BT-40 Direct Driven 10,000/12,000/15,000rpm and BT-50 Belt Driven 8,000/10,000rpm spindle as option. The options on the spindle offer extensive flexibility and supports for various machining applications. All three axes adopt high precision 45/45/45mm roller-rail linear guideways and Ø45/45/45mm ball screws. A12/A14's unique four roller-rail linear guide ways with eight sliders on the Y axis enable the optimal support for high speed and machining accuracy. With Meehanite cast iron (FC30) with stress relieved across the machine structure, machine column and saddle are carefully designed with dual layers casting for the most rigid structure to absorb cutting vibration.

A-12/A-14

X/Y/Z Traverse 1,200/700/700mm (for A-12)
X/Y/Z Traverse 1,400/700/700mm (for A-14)
BT-40 Arm type 24 tools ATC (standard)
BT-50 Arm type 24 tools ATC (option)
BT-40 Belt Drive 8,000rpm (standard)
BT-40 Belt Drive 10,000rpm (option)
BT-40 Direct Drive 10,000/12,000/15,000rpm (option)
BT-50 Belt Drive 8,000/10,000rpm (option)

A-12 / A-14

High-Rigidity Structure Design

Synchronously Adopt the Advantages of the European & Japanese Design

- 954mm wide-span rigid column.
- Taiwan-made PMI extra-large 45/45/45mm precise roller- rail linear guide way is standard and Japan made roller-rail linear guide way is option.
- Adopt high-end direct motors and high rigidity couplings in three axes.

Extra-large X/Y/Z axis motor

3.0/3.0KW 4.0KW (no counter balance design) for BT-40.
3.0/3.0KW 4.0KW (with counter balance design) for BT50.

High Reliability and High Accuracy for Ballscrew Design

Ø45/45/45mm Pitch 12 C3 ball screw with high class double nut provides strong rigidity, high torque, better accuracy, long-life, and effectively heat extension control.

Extra Wide door design

The width of door reaches 1365mm for conveniently loading and unloading the fixture and workpiece.

Stable Air Supply Equipment (option)

The gas storage barrel assists to acquire steady air source to increase equipment utility rate.

Chip Conveyor for A-12/A-14 is standard.

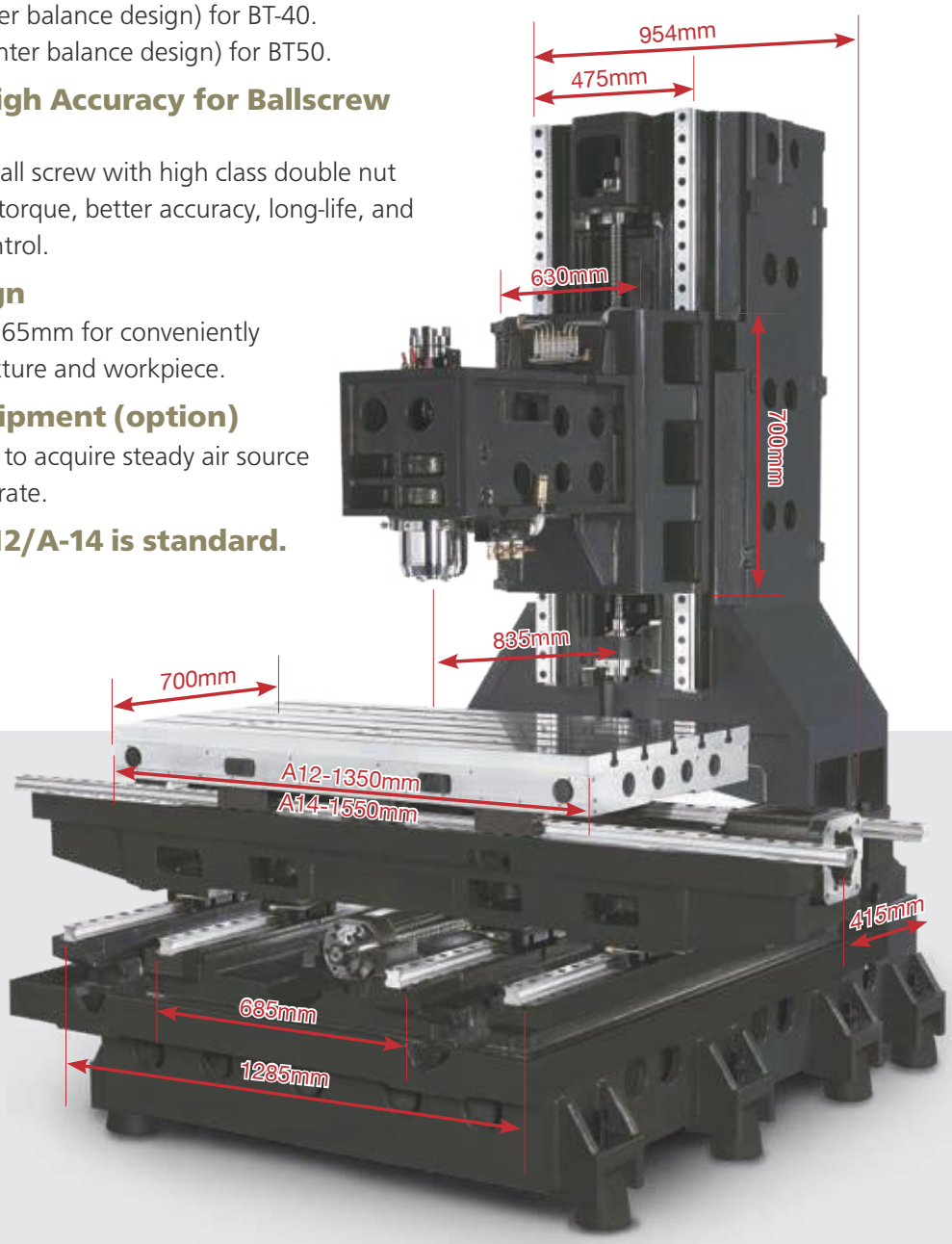

A12 / A14

High-Rigidity Structure Design

Design with More Sliders and More Stable Support for X, Y, and Z axis

- X /Y/Z axes adopt Taiwan made PMI 45/45/45mm width roller-rail linear guide ways with slider quantity 3/2/3 and track quantity 2/4/2.

Design with More Screw-Type Chip Augers for Y axis

2 pcs Screw-type chip augers on Y axis to increase the chip removable capacity.

Enlarge Saddle Pads to Enhance the Support for the Table.

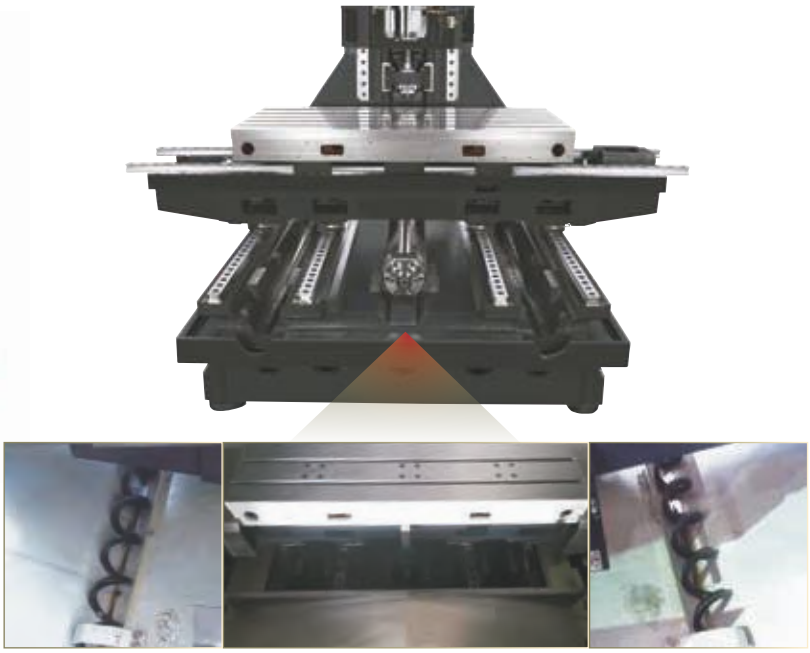

Box-Type Dual-Layers Casting Column

The unique column design achieves the ultra-excellent rigidity to minimize cutting induced vibration and deformation.

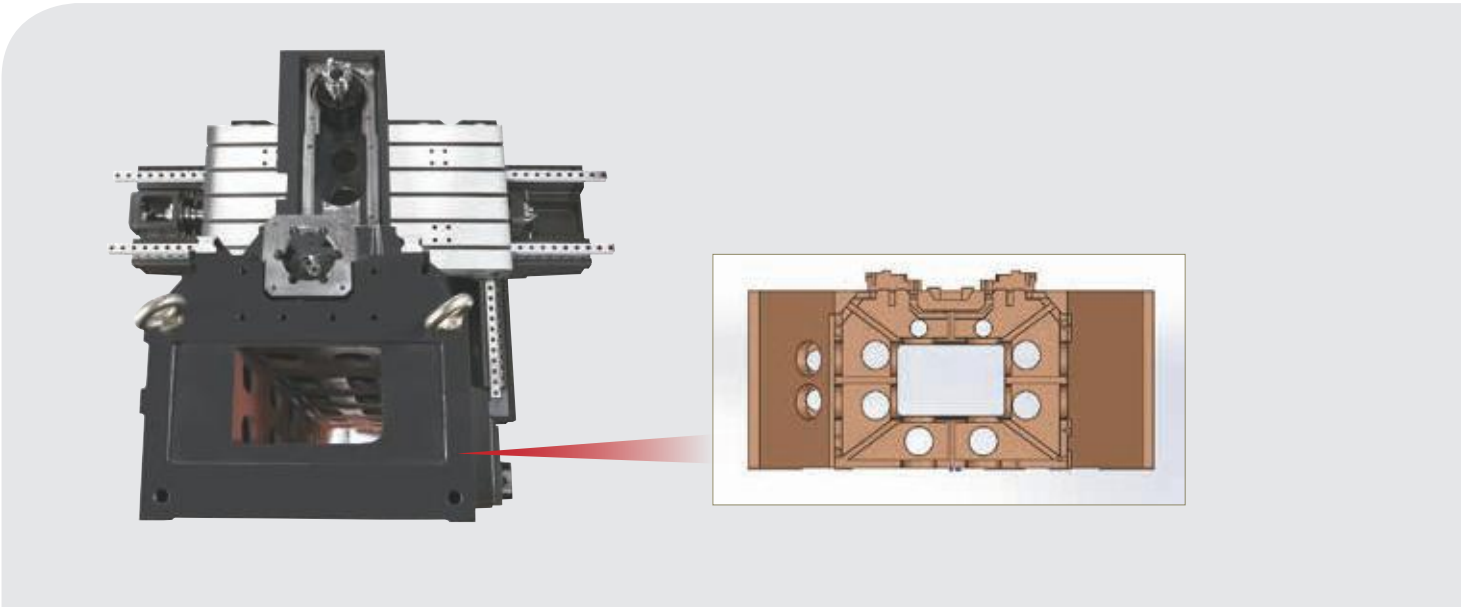

Standard and option accessories

Renishaw Ballbar System

Carry out a three dimensional circular test and optimal adjustment.

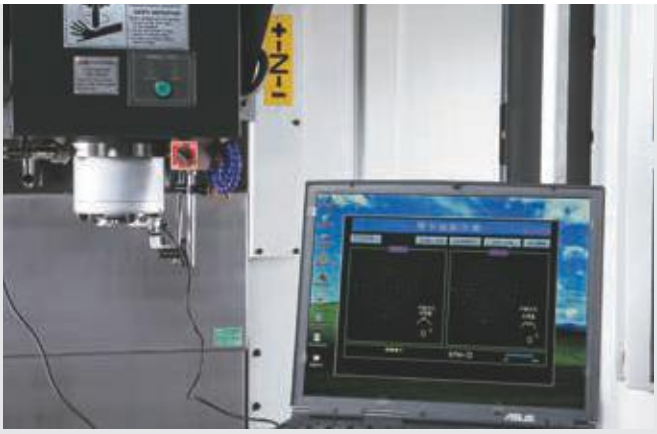

High-speed spindle dynamic characteristic verification diagram

Hinged-Belt Chip Conveyor (option)

Oil Circulating Coolant System for Spindle

Chassis Chip Flushing

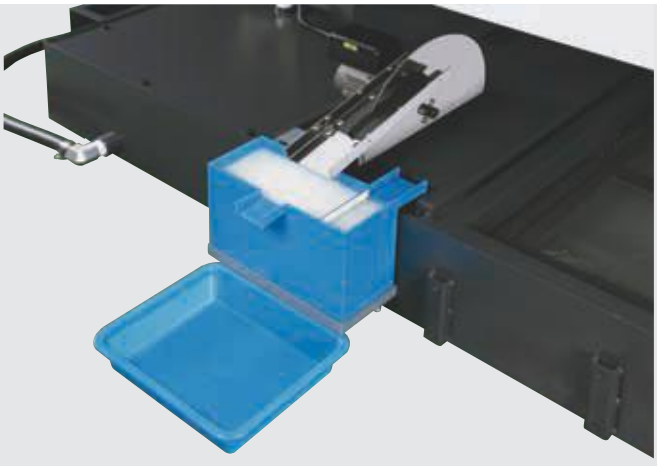

Oil Skimmer (option)

Standard and option accessories

Circle chart
Correct roundness and machine with roundness tester/Renishaw Geometric accuracy of the table, which ensures the movement of the machine degree.

24 Tools Magazine
A rapid arm-type tool changer is driven with a precision cam, maintaining tool-changing accuracy of 0.01mm, which in turn will help maintain long-term spindle clamping accuracy.

LED Fluorescent Light
The LED fluorescent light is installed with the fully enclosed splash guard and it is located on the left & right hand corner to provide a well-lit table area.

Tool Setup Probe (Tool Setter) (option)

Precision Ball-Rail (standard for EA-600 only) or Roller Rail (standard for other models) Linear Guideways and C3 Class Ball Screws for Three Axes
Linear Guide ways are used on all three axes. Because of their high rigidity, low noise, and low friction, this helped to achieve high-speed rapid movement and excellent circular accuracy. Double nut C3 class precision ballscrews are used on all three axes. Along with pretension double nut and supports to minimize the backlash and to compensate for error caused by temperature differences in order to maintain positioning accuracy.

Crystal panel
(for all models)

Crystal panel
(for EA-600 only)

X/Y/Z Linear Scale (option)

Spindle Ring Sprinkler

Strict Quality Control

Calibration with Laser Interferometer was performed

All of our machines are calibrated according to the "VDI 3441 3∂"standard. Calibration is performed for full travel length for each axis. Each measurement is taken six times to ensure the most consistent and accurate readings.

Electric Cabinet with Heat Exchanger

All electrical components are in compliance with safety rules and regulations. All components inside the cabinets are clearly labeled and identified for easy of trouble-shooting.

Chip Remover Equipment

Automatic base-box chip remover equipment which is very easy to remove the chip even the machine is under running.

FANUC Spindle Torque Drawing

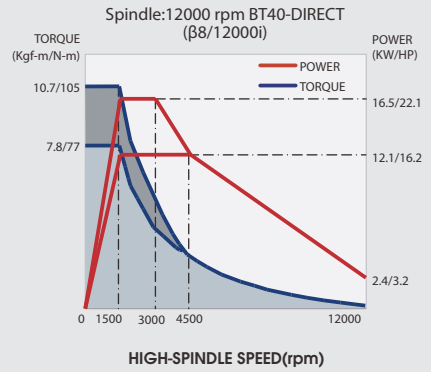

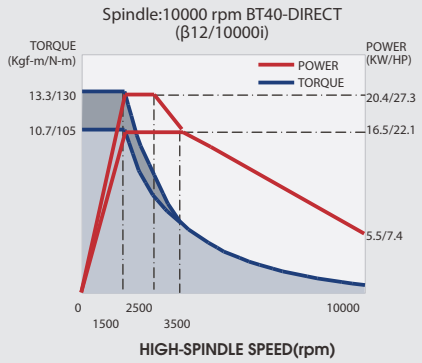

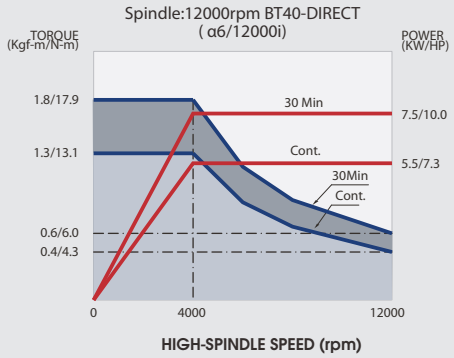

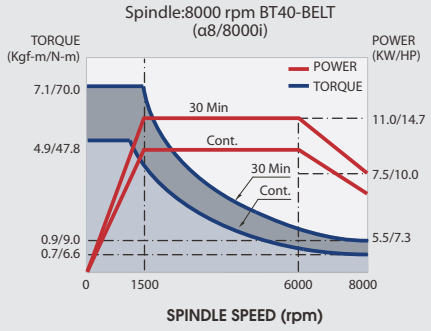

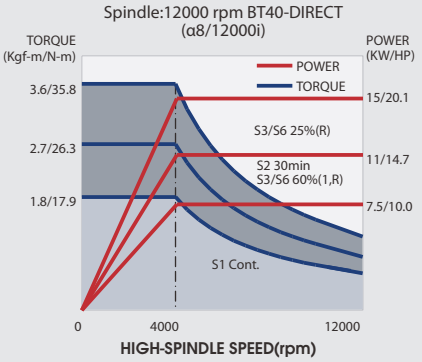

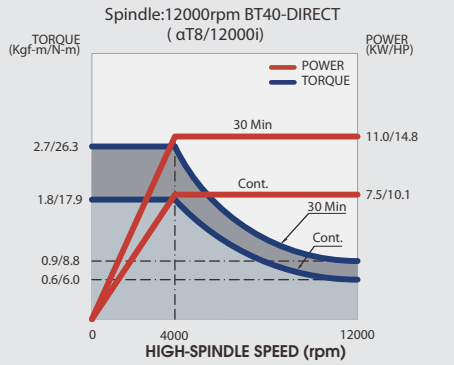

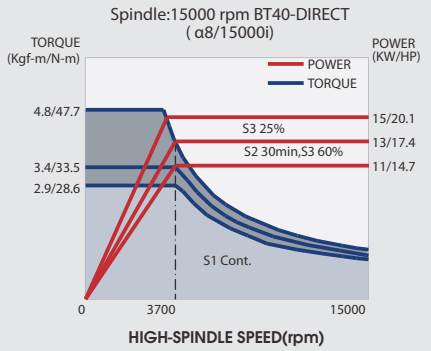

BT-40 Toolholder Figure

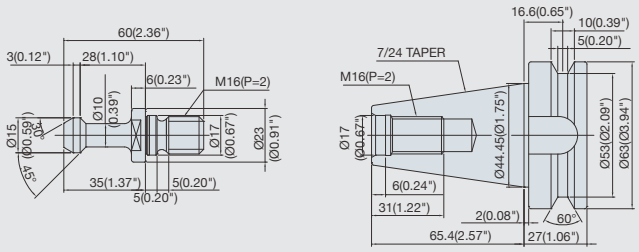

MAZAK BT-40 Toolholder Figure (coolant through spindle)

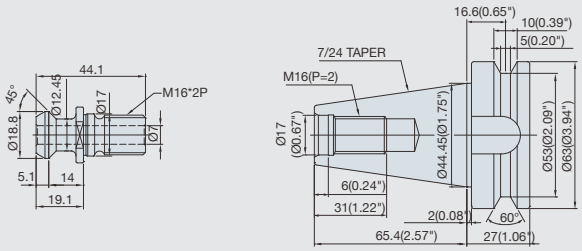

CAT-40 Toolholder Figure (coolant through spindle)

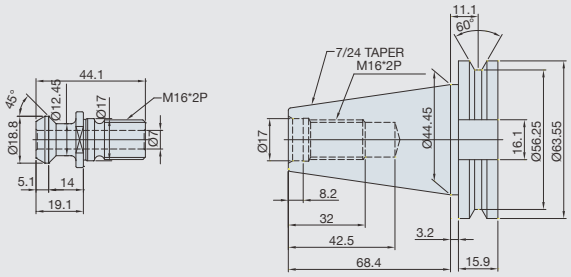

Std.-Directional Pipe
Purpose-General

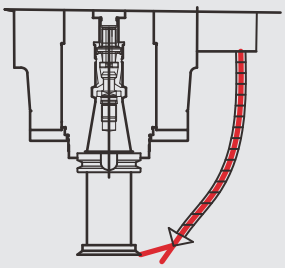

Opt.-Oil Hole Holder
Purpose-Drilling, Boring,etc.

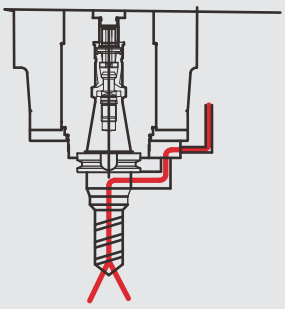

Opt.-Coolant Through Spindle(C.T.S.)
Purpose-Drilling , Boring , etc .

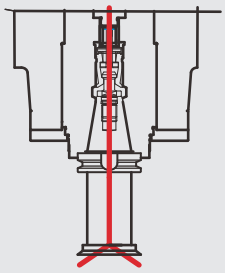

Opt.- Oil Mist
Purpose-Tapping, Reaming,etc.

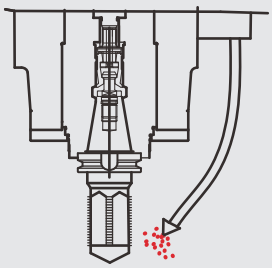

Machine Layout

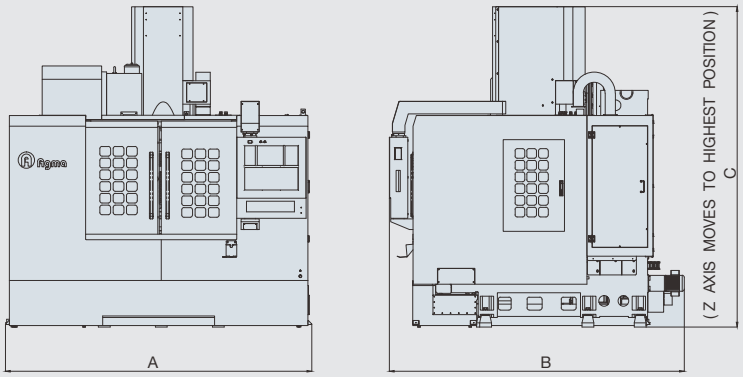

MODEL	A	B	C	D	E	F	G	H	T-slot
EA-600	1900	2560	2560	730	430	65	100	3	18
A-6	2250	2890	2390	700	420	30	120	3	18
HPA-6	2250	2890	2690	700	420	30	120	3	18
A-8	2200	2480	2650	970	510	5	100	5	18
A-10	2250	2610	2650	1100	560	30	100	5	18
A-10L	2800	2750	3090	1200	600	50	100	5	18
HPA-10	4200	2350	2980	1100	560	30	100	5	18
A-12	3600	3350	3200	1350	700	37.5	125	5	18
A-14	3800	3350	3200	1550	700	37.5	125	5	18

Table Dimension

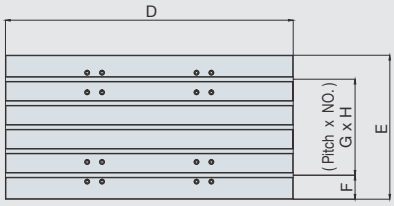

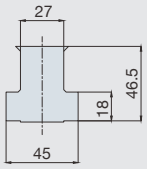

Vertical Machining Center Linear Guide Ways A Series

MODEL	ITEM	UNIT	EA-600	A-6	HPA-6	A-8
SPINDLE	SPINDLE TAPER		NO.40	NO.40	NO.40	No. 40
	TRANSMISSION		DIRECT DRIVEN	DIRECT DRIVEN	DIRECT DRIVEN	DIRECT DRIVEN
	SPINDLE SPEED	r.p.m.	10,000	10,000	15,000	10,000
	SPINDLE DIAMETER	mm(inch)	150(5.9)	150(5.9)	150(5.9)	150(5.9)
TABLE	TABLE SIZE	mm(inch)	730x430 (28.7x16.93)	730x430 (28.7x16.93)	700x420 (27.56x16.54)	970 x 510 (38.19x20.08)
	T-SLOT	mm(inch)	18 x 3 x100 (0.71x3x3.94)	18 x 3 x120 (0.71x3x4.72)	18 x 3 x120 (0.71x3x4.72)	18 x 5 x 100 (0.71x5x3.94)
	WORK AREA	mm(inch)	600x410 (23.62x16.14)	610x420 (24.02x16.54)	610x420 (24.02x16.54)	800 x 510 (31.50x20.08)
	MAX. TALBE LOAD	kgs(lbs)	300(660)	500(1,100)	600(1,320)	500(1,100)
TRAVEL & FEEDRATE	X AXIS	mm(inch)	600(23.62)	610(24.95)	610(24.02)	800(31.50)
	Y AXIS	mm(inch)	410(16.14)	420(16.54)	420(16.54)	510(20.08)
	Z AXIS	mm(inch)	460(18.11)	460(18.11)	460(18.11)	510(20.08)
	DISTANCE FROM SPINDLE NOSE TO TABLE	mm(inch)	160~625(6.30~24.46)	150~610(5.91~24.02)	150~610(5.91~24.02)	150~660(5.91~25.98)
	DISTANCE FROM SPINDLE CENTER TO SURFACE OF COLUMN WAY	mm (inch)	494(19.45)	434(17.09)	434(17.09)	565(22.24)
	RAPID TRAVERSE (X/Y/Z)	m/min(ipm)	X,Y,Z:48/48/48 (1,888/1,888/1,888)	X,Y,Z:36/36/36 (1,416/1,416/1,416)	X,Y,Z:36/36/36 (1,406/1,406/1,406)	X,Y,Z:36/36/30 (1,416/1,416/1,181)
	CUTTING FEEDRATE	mm/min(ipm)	X,Y,Z: 1~10,000(391)	X,Y,Z: 1~12,000(469)	X,Y,Z: 1~30,000(1,172)	X,Y,Z: 1~12,000(469)
ATC	TOOL SHANK		BT-40	BT-40	BT-40	BT-40
	PULL STUD		MAS P40T-1(45°)	MAS P40T-1(45°)	MAS P40T-1(45°)	MAS P40T-1(45°)
	MAGAZINE CAPACITY	pcs	24	24	24	24
	MAX. TOOL DIAMETER (FULL STORAGE)	mm(inch)	Ø80(3.15)	Ø80(3.15)	Ø80(3.15)	Ø80(3.15)
	MAX. TOOL DIAMETER (WITH ADJACENT POCKET EMPTY)	mm(inch)	Ø125(4.93)	Ø125(4.93)	Ø125(4.93)	Ø125(4.93)
	MAX. TOOL LENGTH	mm(inch)	300(11.81)	300(11.81)	300(11.81)	300(11.81)
	MAX. TOOL WEIGHT	kgs(lbs)	7(15.4)	7(15.4)	7(15.4)	7(15.4)
	ATC TYPE		ARM TYPE	ARM TYPE	ARM TYPE	ARM TYPE
MOTOR	FOR SPINDLE (CONT./30 min.)	kw (hp)	7.5/11(10/15)	11/15 (15/20)	7.5/11/15(10/15/20)	11/15 (15/20)
	X/Y/Z Axis	kw (hp)	Fanuc: 3/3/3(4/4/4) Mitsubishi: 1.5/2.2/3 (2.04/3/4.08)	3/3/3 (4/4/4)	3/4/4(4/5.4/5.4)	3/3/3 (4/4/4)
	LUBRICATION PUMP	kw (hp)	0.025(0.033)	0.025(0.033)	0.025(0.033)	0.025(0.033)
	COOLANT PUMP	kw (hp)	0.49(0.66)	0.49(0.66)	0.49(0.66)	0.49(0.66)
LINEAR GUIDEWAY	X/Y/Z WIDTH	mm(inch)	30/30/30 (11.81/11.81/11.81)	35/35/35 (13.78/13.78/13.78)	35/35/35 (13.78/13.78/13.78)	30/45/45 (11.81/17.72/17.72)
	SLIDER QUANTITY	PC	2/2/2	2/2/2	2/2/2	2/2/2
	TRACK QUANTITY	PC	2/2/2	2/2/2	2/2/2	2/2/2
	TYPE		BALL RAIL	ROLLER RAIL	ROLLER RAIL	ROLLER RAIL
MISC.	MACHINE HEIGHT	mm(inch)	2,560(1,008)	2,390(941)	2,690(1,059)	2,650(1,043)
	MACHINE SPACE	mm(inch)	1,900x2,560 (748x1,008)	2,250x2,890 (886x1,138)	2,250x2,890 (886x1,138)	2,200x2,475 (866x974)
	MACHINE WEIGHT	kgs(lbs)	4,000(8,818)	5,500(12,125)	5,700(12,566)	6,000(13,227)
	CONTROLLER		0iMF 8.4" STD M80 8.4" OPT.	0iMF 8.4" STD M80 8.4" OPT.	0iMF 8.4" STD M80 8.4" OPT.	0iMF 8.4" STD M80 8.4" OPT.

●Specification is subject to change without further notice

MODEL	ITEM	A-10	A-10L	HPA-10	A-12	A-14
SPINDLE	SPINDLE TAPER	NO.40	NO.40	NO.40	NO.40	NO.40
	TRANSMISSION	DIRECT DRIVEN	DIRECT DRIVEN	DIRECT DRIVEN	BELT DRIVEN	BELT DRIVEN
	SPINDLE SPEED	10,000	10,000	15,000	8,000	8,000
	SPINDLE DIAMETER	150(5.9)	150(5.9)	150(5.9)	150(5.9)	150(5.9)
TABLE	TABLE SIZE	1,100x560 (43.31x22.05)	1,200x600 (47.24x23.62)	1,100x560 (43.31x22.05)	1,350x700 (53.15x27.56)	1,550x700 (61.02x27.56)
	T-SLOT	18 x 5 x100 (0.71x5x3.94)	18 x 5 x100 (0.71x5x3.94)	18 x 5 x100 (0.71x5x3.94)	18 x 5 x125 (0.71x5x4.92)	18 x 5 x125 (0.71x5x4.92)
	WORK AREA	1,020x560 (40.16x22.05)	1,020x600 (40.16x23.62)	1,020x560 (40.16x22.05)	1,200*700 (47.24x27.56)	1,400*700 (55.12x27.56)
	MAX. TALBE LOAD	700(1,540)	700(1,540)	900(1,980)	1,200(2,640)	1,400(3,080)
TRAVEL & FEEDRATE	X AXIS	1,020(40.16)	1,020(40.16)	1,020(40.16)	1,200(47.24)	1,400(55.12)
	Y AXIS	560(22.05)	600(23.62)	560(22.05)	700(27.56)	700(27.56)
	Z AXIS	510(20.08)	600(23.62)	510(20.08)	700(27.56)	700(27.56)
	DISTANCE FROM SPINDLE NOSE TO TABLE	150~660(5.91~25.98)	150~750(5.91~29.53)	150~660(5.91~25.98)	120~820(4.72~32.28)	120~820(4.72~32.28)
	DISTANCE FROM SPINDLE CENTER TO SURFACE OF COLUMN WAY	624(24.57)	655(25.79)	624(24.57)	820(32.28)	820(32.28)
	RAPID TRAVERSE (X/Y/Z)	X,Y,Z:32/32/24 (1,259/1,259/944)	X,Y,Z:32/32/24 (1,259/1,259/944)	X,Y,Z:32/32/30 (1,250/1,250/1,172)	X,Y,Z:32/32/24 (1,259/1,259/944)	X,Y,Z:32/32/24 (1,259/1,259/944)
	CUTTING FEEDRATE	X,Y,Z: 1~12,000(469)	X,Y,Z: 1~12,000(469)	X,Y,Z: 1~30,000(1,172)	X,Y,Z: 1~10,000(391)	X,Y,Z: 1~10,000(391)
ATC	TOOL SHANK	BT-40	BT-40	BT-40	BT-40	BT-40
	PULL STUD	MAS P40T-1(45°)	MAS P40T-1(45°)	MAS P40T-1(45°)	MAS P40T-1(45°)	MAS P40T-1(45°)
	MAGAZINE CAPACITY	24	24	24	24	24
	MAX. TOOL DIAMETER (FULL STORAGE)	Ø80(3.15)	Ø80(3.15)	Ø80(3.15)	Ø80(3.15)	Ø80(3.15)
	MAX. TOOL DIAMETER (WITH ADJACENT POCKET EMPTY)	Ø125(4.93)	Ø125(4.93)	Ø125(4.93)	Ø125(4.93)	Ø125(4.93)
	MAX. TOOL LENGTH	300(11.81)	300(11.81)	300(11.81)	300(11.81)	300(11.81)
	MAX. TOOL WEIGHT	7(15.4)	7(15.4)	7(15.4)	7(15.4)	7(15.4)
	ATC TYPE	ARM TYPE	ARM TYPE	ARM TYPE	ARM TYPE	ARM TYPE
MOTOR	FOR SPINDLE (CONT./30 min.)	11/15 (15/20)	11/15 (15/20)	7.5/11/15(10/15/20)	11/15 (15/20)	11/15 (15/20)
	X/Y/Z Axis	3/3/4(4/4/5.4)	3/3/4(4/4/5.4)	4/7/7(5.4/10/10)	3/3/4(4/4/5.4)	3/3/4(4/4/5.4)
	LUBRICATION PUMP	0.025(0.033)	0.025(0.033)	0.025(0.033)	0.025(0.033)	0.025(0.033)
	COOLANT PUMP	0.49(0.66)	0.49(0.66)	0.49(0.66)	0.49(0.66)	0.49(0.66)
LINEAR GUIDEWAY	X/Y/Z WIDTH	35/45/45 (13.78/17.72/17.72)	35/45/45 (13.78/17.72/17.72)	35/45/45 (13.78/17.72/17.72)	45/45/45 (17.72/17.72/17.72)	45/45/45 (17.72/17.72/17.72)
	SLIDER QUANTITY	2/2/2	2/2/2	2/2/2	3/2/3	3/2/3
	TRACK QUANTITY	2/2/2	2/2/2	2/2/2	2/4/2	2/4/2
	TYPE	ROLLER RAIL	ROLLER RAIL	ROLLER RAIL	ROLLER RAIL	ROLLER RAIL
MISC.	MACHINE HEIGHT	2,650(1,043)	3,085(1,215)	2,980(1,173)	3,200(1,260)	3,200(1,260)
	MACHINE SPACE	2,250x2,610 (886x1,028)	2,800x2,736 (1,102x1,077)	4,200x2,350 (1,654x925)	3,600x3,350 (1,417x1,319)	3,800x3,350 (1,496x1,319)
	MACHINE WEIGHT	6,500(14,330)	6,800(14,991)	6,800(14,991)	9,500(20,944)	10,000(22,046)
	CONTROLLER	0iMF 8.4" STD M80 8.4" OPT.	0iMF 8.4" STD M80 8.4" OPT.	0iMF 8.4" STD M80 8.4" OPT.	0iMF 8.4" STD M80 8.4" OPT.	0iMF 8.4" STD M80 8.4" OPT.

●Specification is subject to change without further notice

Linear Guide Way A Series Accessories

STANDARD: ● ; OPTION: ○ ; NOT AVAILABLE: X

ITEM / MODEL	EA-600	A-6	HPA-6	A-8
1. Fully Splash Guard	●	●	●	●
2. Spindle Air Blast	●	●	●	●
3. Oil Circulatig Cooling System Spindle	●	●	●	●
4. Cutting Coolant Equipment	●	●	●	●
5. Three-color Indicator Light	●	●	●	●
6. LED Fluorescent Light	●	●	●	●
7. Automatic Lubrcation Equipment	●	●	●	●
8. Three Axes Slideways Protector	●	●	●	●
9. Heat Exchanger for Electric Cabinet	●	●	●	●
10. Tool Box w/ Levelling Bolts & Pads	●	●	●	●
11. One Year Warranty for Machine	●	●	●	●
12. Auto Power Off	●	●	●	●
13. RS-232 Interface	●	●	●	●
14. Cutting Air Blast	●	●	●	●
15. Rigid Tapping	●	●	●	●
16. Operation Manual	●	●	●	●
17. Remote Manual Pulse Generator (M.P.G.)	●	●	●	●
18. Spindle Ring Sprinkler	●	●	●	●
19. Chassis Chip Flushing	●	●	●	●
20. X Axis Screw Type Chip Auger	X	X	X	● In Front
21. Y Axis Screw Type Chip Auger	● In Central	X	X	● 2 pcs
22. Chip Conveyor	○ In Back	○ In Back	● In Back	○ In Front
23. Forceful Cleaning Spray-Gun	●	●	●	●
24. Hollow Ballscrew with Air Cooling System	X	X	●	X
25. AICC For Fanuc only	●	●	●	●
26. Transformer (Exclude Taiwan, China, India, USA and Canada)	20KVA	20KVA	25KVA	20KVA
27.Ball-Raill/Roller-Rail	PMI Ball-Rail	PMI Roller-Rail	NSK Roller-Rail	PMI Roller-Rail
28. CE/CSA Electrical Specification for European/Canada only	●	●	●	●
29. 24 TOOLS BT-40 ATC	●	●	●	●
30. 30 TOOLS BT-40 ATC	X	X	X	X
31. 16 TOOLS ARMLESS TYPE BT-40 ATC	○	○	○	○
32. WITHOUT ATC	○	○	○	○
33. BT-40 DIRECT DRIVEN 10,000RPM 7.5/11KW	●	○	○	○
34. BT-40 DIRECT DRIVEN 12,000RPM 7.5/11KW	○	○	○	○
35. BT-40 DIRECT DRIVEN 15,000RPM 7.5/11KW	○	○	●	○
36. BT-40 BELT DRIVEN 8,000RPM 7.5/11KW	○	○	X	○
37. BT-40 BELT DRIVEN 10,000RPM 7.5/11KW	○	○	X	○
38. BT-40 DIRECT DRIVEN 10,000RPM 11/15KW	○	●	X	●
39. BT-40 DIRECT DRIVEN 12,000RPM 11/15KW	○	○	X	○
40. BT-40 BELT DRIVEN 8,000RPM 11/15KW	○	○	X	○
41. BT-40 BELT DRIVEN 10,000RPM 11/15KW	○	○	X	○
42. BT-50 BELT DRIVEN 8,000RPM 15/18.5KW	X	X	X	X
43. BT-50 BELT DRIVEN 10,000RPM 15/18.5KW	X	X	X	X
44. Mitsubishi M80 10.4" controller	○	○	○	○
45. Siemens 828D/840D Controller	○	○	○	○
46. Heidenhain TNC-620/TNC-640 Controller	○	○	○	○
47. Taiwan made PMI roller-rail linear guideway	○	●	○	●
48. Japan made THK/NSK ball-rail/roller-rail linear guideways	○	○	●	○
49. Coolant-thru tool holder	○	○	○	○
50. Three Axes Optical Linear Scale	○	○	○	○
51. Oil Mist	○	○	○	○
52. Oil Mist Collector	○	○	○	○
53. Coolant Through Spindle A Type (20/70 Bars- closed hole)	○	○	○	○
54. Renishaw TS-27R Tool Setup Probe (Tool Setter)	○	○	○	○
55. Renishaw Tool Machining Probe OMP-60	○	○	○	○
56. Disc Type Oil Skimmer	○	○	○	○
57. Automatic Door	○	○	○	○
58. Air Conditioning For Electrical Cabinet	○	○	○	○
59. Data Server (Include 2G Card) For Fanuc 0iMF	○	○	○	○
60. AICCII-200 For Fanuc 0iMF	○	○	○	○
61. Nano Smoothing For Fanuc 0iMF	○	○	○	○
62. 4TH AXIS INTERFACE	○	○	○	○
63. CNC ROTARY TABLE	○	○	○	○

ITEM / MODEL	A-10	A-10L	HPA-10	A-12	A-14
1. Fully Splash Guard	●	●	●	●	●
2. Spindle Air Blast	●	●	●	●	●
3. Oil Circulatig Cooling System Spindle	●	●	●	●	●
4. Cutting Coolant Equipment	●	●	●	●	●
5. Three-color Indicator Light	●	●	●	●	●
6. LED Fluorescent Light	●	●	●	●	●
7. Automatic Lubrcation Equipment	●	●	●	●	●
8. Three Axes Slideways Protector	●	●	●	●	●
9. Heat Exchanger for Electric Cabinet	●	●	●	●	●
10. Tool Box w/ Levelling Bolts & Pads	●	●	●	●	●
11. One Year Warranty for Machine	●	●	●	●	●
12. Auto Power Off	●	●	●	●	●
13. RS-232 Interface	●	●	●	●	●
14. Cutting Air Blast	●	●	●	●	●
15. Rigid Tapping	●	●	●	●	●
16. Operation Manual	●	●	●	●	●
17. Remote Manual Pulse Generator (M.P.G.)	●	●	●	●	●
18. Spindle Ring Sprinkler	●	●	●	●	●
19. Chassis Chip Flushing	●	●	●	●	●
20. X Axis Screw Type Chip Auger	● In Front	● In Front	X	X	X
21. Y Axis Screw Type Chip Auger	● 2 pcs	● 2 pcs	● 2 pcs	● 2 pcs	● 2 pcs
22. Chip Conveyor	○ In Front	○ In Front	● In Front	● In Front	● In Front
23. Forceful Cleaning Spray-Gun	●	●	●	●	●
24. Hollow Ballscrew with Air Cooling System	X	X	●	X	X
25. AICC For Fanuc only	●	●	●	●	●
26. Transformer (Exclude Taiwan, China, India, USA and Canada)	20KVA	20KVA	35KVA	35KVA	35KVA
27.Ball-Raill/Roller-Rail	PMI Roller-Rail	PMI Roller-Rail	NSK Roller-Rail	PMI Roller-Rail	PMI Roller-Rail
28. CE/CSA Electrical Specification for European/Canada only	●	●	●	●	●
29. 24 TOOLS BT-40 ATC	●	●	●	●	●
30. 30 TOOLS BT-40 ATC	○	○	○	○	○
31. 16 TOOLS ARMLESS TYPE BT-40 ATC	○	○	○	○	○
32. WITHOUT ATC	○	○	○	○	○
33. BT-40 DIRECT DRIVEN 10,000RPM 7.5/11KW	○	○	○	○	○
34. BT-40 DIRECT DRIVEN 12,000RPM 7.5/11KW	○	○	○	○	○
35. BT-40 DIRECT DRIVEN 15,000RPM 7.5/11KW	○	○	●	○	○
36. BT-40 BELT DRIVEN 8,000RPM 7.5/11KW	○	○	X	○	○
37. BT-40 BELT DRIVEN 10,000RPM 7.5/11KW	○	○	X	○	○
38. BT-40 DIRECT DRIVEN 10,000RPM 11/15KW	●	●	X	○	○
39. BT-40 DIRECT DRIVEN 12,000RPM 11/15KW	○	○	X	○	○
40. BT-40 BELT DRIVEN 8,000RPM 11/15KW	○	○	X	●	●
41. BT-40 BELT DRIVEN 10,000RPM 11/15KW	○	○	X	○	○
42. BT-50 BELT DRIVEN 8,000RPM 15/18.5KW	X	X	X	○	○
43. BT-50 BELT DRIVEN 10,000RPM 15/18.5KW	X	X	X	○	○
44. Mitsubishi M80 10.4" controller	○	○	○	○	○
45. Siemens 828D/840D Controller	○	○	○	○	○
46. Heidenhain TNC-620/TNC-640 Controller	○	○	○	○	○
47. Taiwan made PMI roller-rail linear guideway	●	●	○	●	●
48. Japan made THK/NSK ball-rail/roller-rail linear guideways	○	○	●	○	○
49. Coolant-thru tool holder	○	○	○	○	○
50. Three Axes Optical Linear Scale	○	○	○	○	○
51. Oil Mist	○	○	○	○	○
52. Oil Mist Collector	○	○	○	○	○
53. Coolant Through Spindle A Type (20/70 Bars- closed hole)	○	○	○	○	○
54. Renishaw TS-27R Tool Setup Probe (Tool Setter)	○	○	○	○	○
55. Renishaw Tool Machining Probe OMP-60	○	○	○	○	○
56. Disc Type Oil Skimmer	○	○	○	○	○
57. Automatic Door	○	○	○	○	○
58. Air Conditioning For Electrical Cabinet	○	○	○	○	○
59. Data Server (Include 2G Card) For Fanuc 0iMF	○	○	○	○	○
60. AICCII-200 For Fanuc 0iMF	○	○	○	○	○
61. Nano Smoothing For Fanuc 0iMF	○	○	○	○	○
62. 4TH AXIS INTERFACE	○	○	○	○	○
63. CNC ROTARY TABLE	○	○	○	○	○